Ronix®
Premium Quality

POWER TOOLS

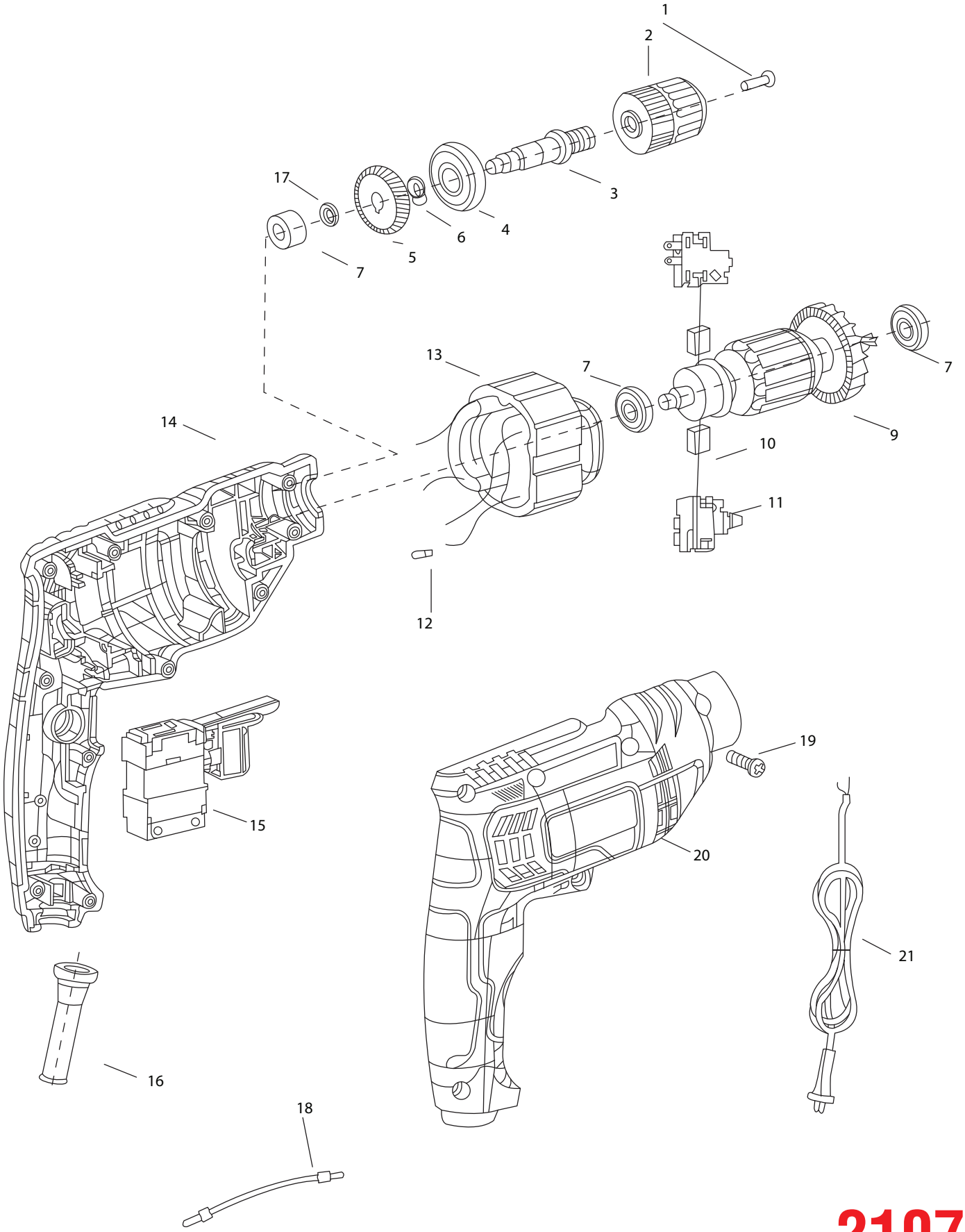

2107

Electric Drill 400W