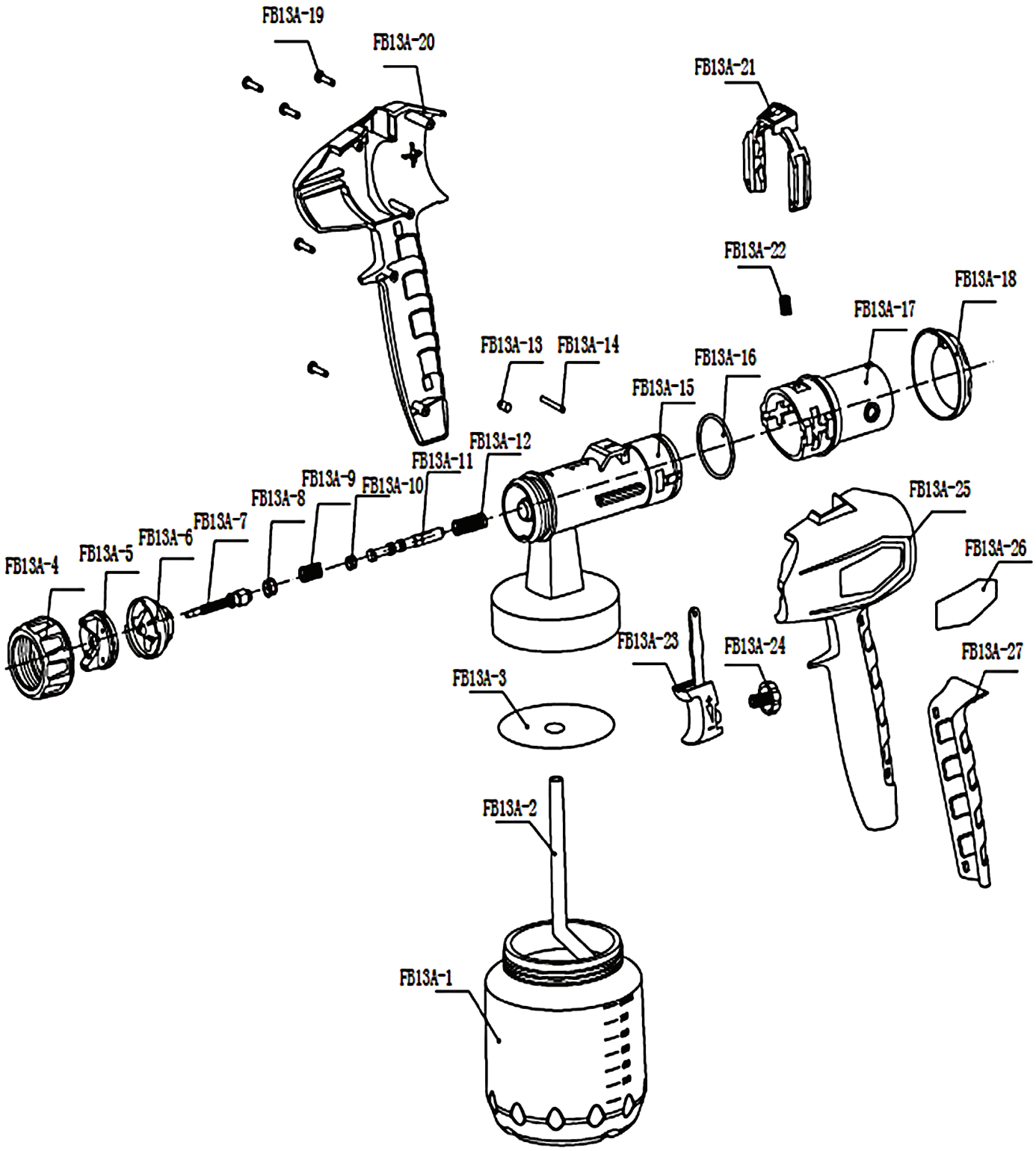

1375T

Electric Spray Gun 750W

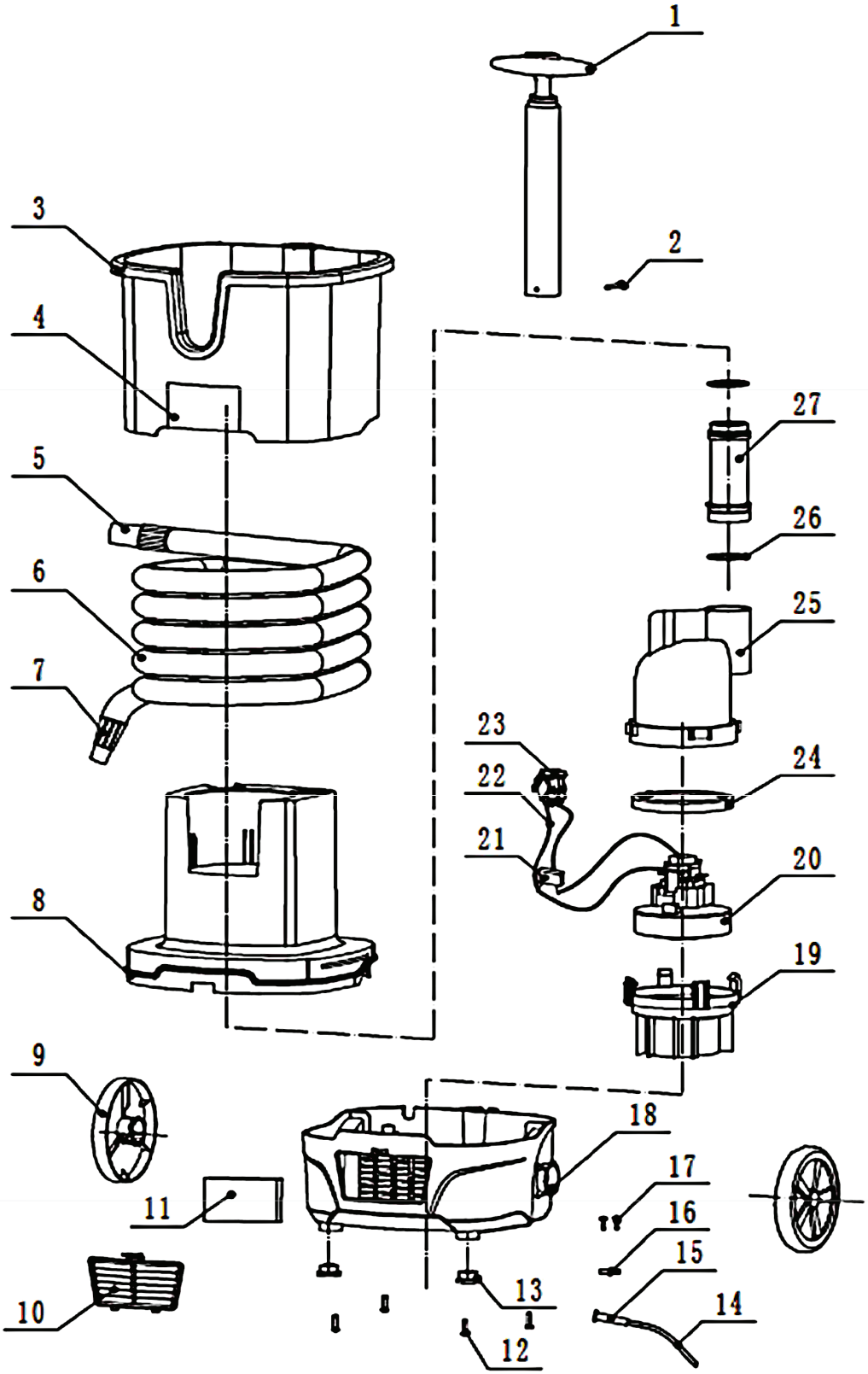

1375T

Electric Spray Gun 750W